MAGPUL INDUSTRIES CORP - TECH NOTE - PRS2-001

PRODUCT	**PRS2**
WEAPON	**HK G3/HK 91**
CATEGORY	**Installation**
DIFFICULTY LEVEL	**Medium**
PUBLISHED	**11.14.06**
TOOLS REQUIRED	**Flat-Head Screw Driver, 1/8" Hex Key, Rubber Mallet**

PRS2 HK G3/91

Installation of the PRS2 Stock for the HK G3

The PRS2-G3 version is designed to replace the fixed butt stock on the HK G3/HK 91 rifle with standard buffer unit. All mounting hardware is included. Only a qualified armorer or gunsmith should perform installation of this equipment. If you do not meet these requirements, have a qualified professional perform this installation. *DISCLAIMER: Magpul Industries shall not be responsible for injury, death or damage to property resulting from improper installation, misuse or illegal use of this product.*

WARNING: Observe safe firearm handling practices at all times. Failure to do so may result in grievous bodily injury or death.

PARTS INCLUDED (NOT TO SCALE):

1. Square Nut
2. Large Washer
3. 1-1/8" Button Head Cap Screw
4. 2" Flat-Head Cap Screw
5. 1/2" Flat-Head Screw
6. Cover Plate
7. Quick Release Plate

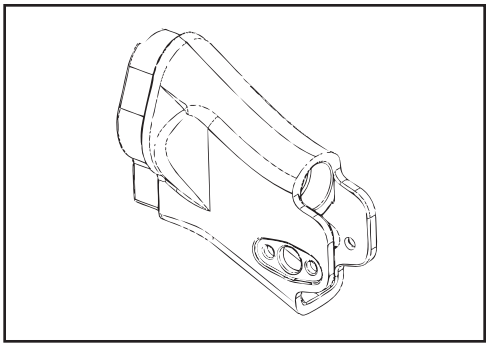

STEP 1 - Confirm Required Stock Type

WARNING: Before beginning installation, make sure the weapon is unloaded and the safety engaged. First, confirm the HK-type Interface has been included. If the interface differs from that pictured, contact Magpul for a replacement stock at 1.877.4MAGPUL.

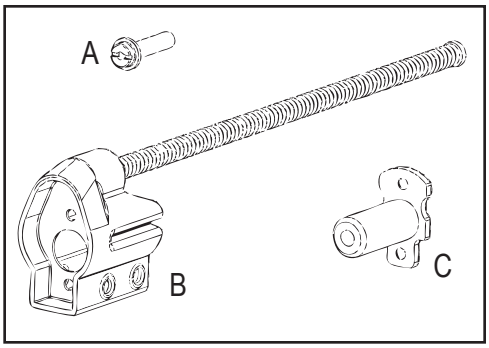

STEP 2 - Remove Original Stock

The PRS2 utilizes several pieces from the OEM stock. Remove original stock per armory guidelines and disassemble. Confirm that the following parts are present:

A. G3 Buffer Screw (1)
B. G3 Back Plate Assembly (1)
C. G3 Buffer, Standard (1)

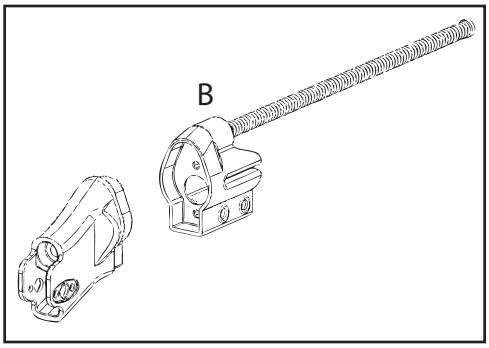

STEP 3 - Fit Interface

Mate the PRS2 *HK Interface* with *G3 Back Plate* (B). Note: This is a snug fit and may require light tapping with a rubber mallet to ensure the *HK Interface* is fully seated in the *G3 Back Plate (B).*

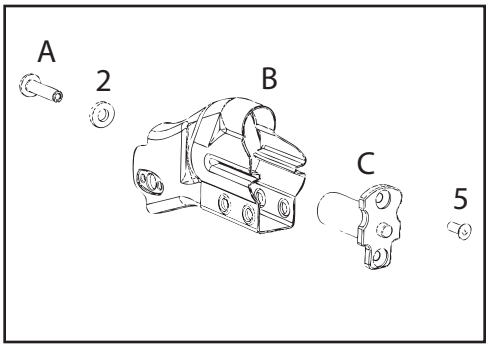

STEP 4 - Install Buffer

Drop *G3 Buffer* (C) in its original hole through the front of the *G3 Back Plate* (B). Install *1/2" Flat-Head Cap Screw* (5) in top hole of *G3 Buffer* (C) through front of *G3 Back Plate* (B). Note: The screw will form its own threads requiring additional force upon first installation. Install *G3 Buffer Screw* (A) and *Large Washer* (2) through rear of *HK Interface*. (Recoil spring and guide rod not shown).

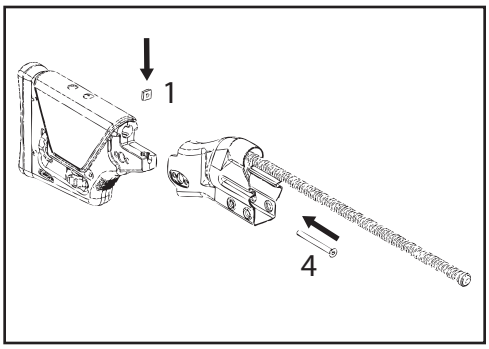

STEP 5 - Mount PRS Stock Body

Drop *Square Nut* (1) in slot on front of *PRS Body*, and mate with *HK Interface*. Drop *2" Flat-Head Cap Screw* (4) through bottom hole of *G3 Buffer* (C). Using *1/8" Hex Key*, tighten until hand tight.

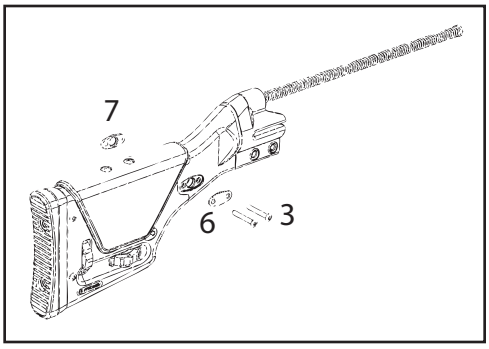

STEP 6 - Install Quick Release Sling Mount (Reversible)

Mount *Cover Plate* (6) in right-side slot on *HK Interface*, and feed *1-1/8" Button Head Cap Screws* (3) through holes. Mount *Quick Release Plate* (7) in left-side slot, **making sure side with smaller diameter hole is facing out**. Tighten screws using 1/8" Hex Key. Parts may be reversed for left-handed users. Mount stock per armory guidelines. Have a qualified professional verify proper installation prior to loading or firing weapon.

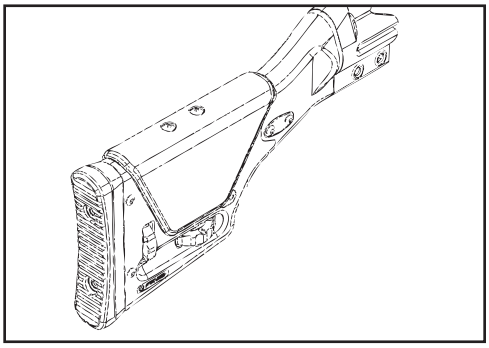

STEP 7 - Shift Cheek Piece (Optional)

The Cheekpiece is attached to the stock by two screws and may be adjusted forward and aft to accommodate different users. To adjust, use a 1/8" Hex Key to loosen the top screws. DO NOT remove screws all the way as this may cause small parts to come loose. Shift Cheekpiece into desired position and re-tighten screws with hand pressure.